SVC – 021312: Feb 13, 2012
York Variable Speed Air Handlers

SERVICE BULLETIN

Overview:

In some EarthLinked® Heating and Cooling System installations utilizing the York variable speed air handler, when the system is operated in heat mode and the thermostat set point is raised enough to call for two stages of heat, in some cases there is no time delay between activation of the compressor (Y2) and auxiliary heat (W2), with the result that the blower does not come on.

Models Impacted:

This may be seen in EarthLinked® systems involving the ETI model AVY-018,-024, -030, -036, -042, -048, -060 or -072 air handlers. This may also occur in systems utilizing the York "MV" Series modular air handlers.

This problem **DOES NOT EXIST** with the **ETI AVS Series** variable speed air handlers.

Field Actions:

This situation can be corrected by field installing a delay-on-make timer at the W2 connection as shown in the following illustration. The time delay should be set for 2 minutes. A Mars model #32391 or equivalent timer is recommended, available at HVAC distributors and wholesalers.

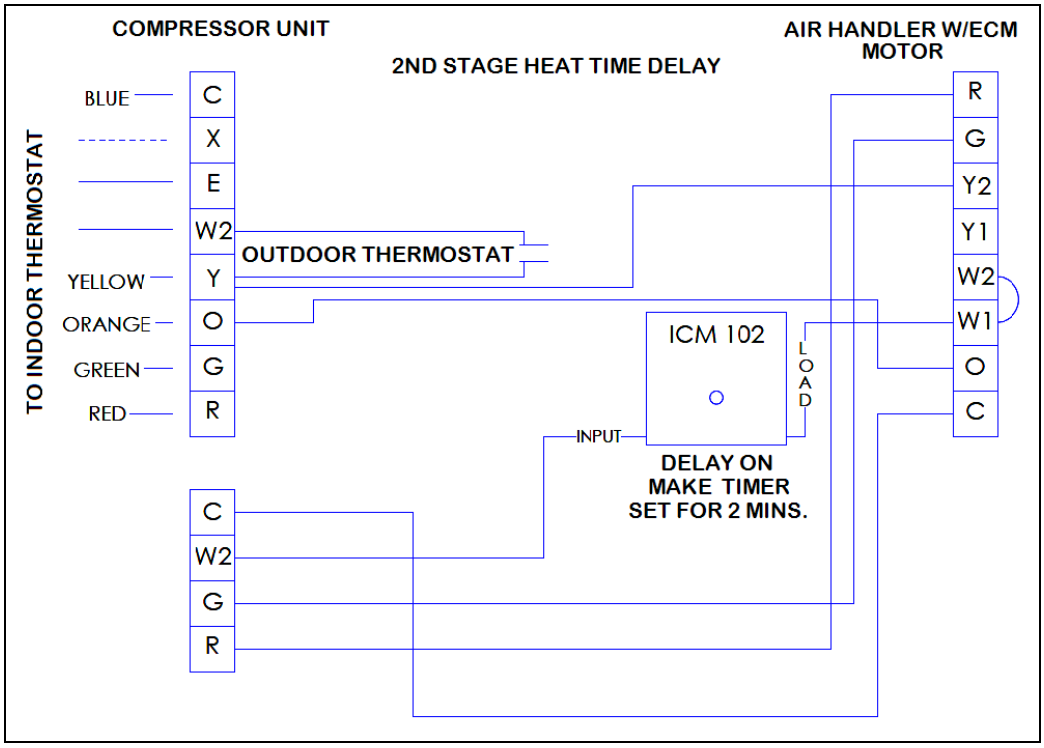

Warranty:

This bulletin is for information only and the service described herein is NOT covered by the ETI Limited Warranty.

Contact:

For additional information, call ETI Technical Support @ 1-863-701-0096.